Fixed Dome Junction Box

TR-JB03-G-IN

Specifications

Bracket	TR-JB03-G-IN
Application	Junction box for IPC32X, IPC31X and IPCD1XX series fixed dome
Dimensions	Ø 108.6 × 36mm (Ø 4.28” × 1.42”)
Weight	0.2kg (0.44lb)
Material	Aluminum alloy

Dimension

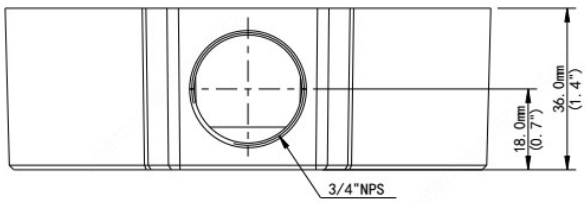

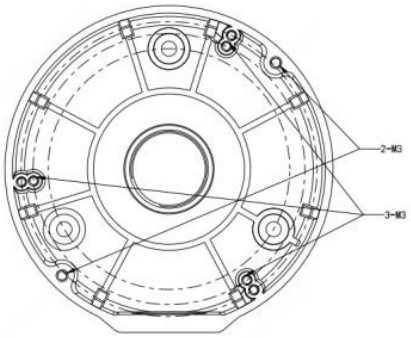

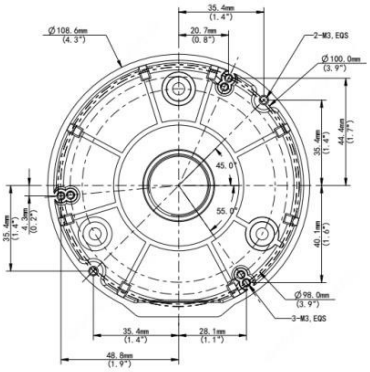

Galaxy® SECURITY

unv UNV Authorized Distributor

Markham Head Office: 1-866-946-8998
7755 Warden Ave, Unit 1, Markham ON L3R 0N3, CA

Mississauga Branch: 1-855-999-6998
1200 Aerowood Dr, Unit 5, Mississauga ON L4W 2S7, CA